A CELL PREPARATION STAGE FOR AUTOMATIC CELL INJECTION

By

Cong Lu

A thesis submitted in conformity with the requirements
for the degree of Master of Applied Science

Graduate Department of Mechanical and Industrial Engineering
University of Toronto

A Cell Preparation Stage for Automatic Cell Injection

Cong Lu

Master of Applied Science

Graduate Department of Mechanical and Industrial Engineering
University of Toronto

2011

Abstract

Cancer study and drug selection research attract more and more researchers, which need a significant laboratory technique, named cell injection. Hundreds of cells are loaded on devices and injected to investigate the behavior of the cells. Traditionally, cell injection is performed manually, which leads to human fatigue, is time-consuming and has a low success rate. Therefore, a system which can replicate the actions of what technicians do, such as to aspirate cells, transfer cells, immobilize cells, and release cells automatically, is needed. This system must be accurate, reliable, and efficient and operate without human intervention. A cell-transfer-cover and a cell-holder have been fabricated and a cell injection system has been set up to investigate the performance of the newly created device. Simulations and experiments have proven that this system would carry out the entire process of cell injection with the result of enhancing the speed of this important activity.

Acknowledgments

I would like to express my great gratitude to my supervisor, Professor James K. Mills for his guidance, patience, encouragement and support throughout the period of this research. He has not only given me the chance to study, but has also provided plenty of useful ideas and suggestions.

I would like to extend my appreciation to Dr. Youdong Wang (Department of Medicine, University of Toronto) for his kind assistance in preparation of zebrafish embryos. He has given me valuable help and offered many suggestions regarding the biological side of this research.

I also appreciate the support I have received from my friends: Dr. Henry Kar Hang Chu, Dr. Issam M. Bahadur and Dr. Haibo Huang for their discussions and assistance in the laboratory experiment.

I would also like to thank the Natural Sciences and Engineering Research Council of Canada for funding this work.

Finally, I wish to thank my family for all of their support and encouragement.

Table of Contents

List of Figures

List of Nomenclature

$d_{diameter}$	Diameter of a newly produced zebra fish embryo
$F_{aspirating}$	The aspirating force applied on a cell
G_{cell}	Gravity of a newly produced zebra fish embryo
g	Acceleration of gravity
m_{cell}	Mass of a newly produced zebra fish embryo
P	Suction pressure generated by a suction pump
V_{cell}	Volume of a newly produced zebra fish embryo
ρ_{cell}	Density of a newly produced zebra fish embryo

Chapter 1
INTRODUCTION

1.1 Automation in Cell Injection

Cancer study and drug selection research has been attracting more and more researchers from around the world, which calls for a significant laboratory technique, named cell injection. The basic method is to investigate the performance of a single cell through material intake. So usually hundreds of cells as a group have to be injected at the same time. These tasks, referred to as micro-operations, are a critical technology in cell injection and many other scientific fields. The methods to accomplish micro-operation in bioengineering can be categorized as manual and automatic. Traditionally, the variety of tasks required in cell injection, including cell aspiration cell transferring and cell holding, is conducted by technicians. Such manual work easily leads to human fatigue, and is very time-consuming, has low productivity and low success rate because of the small size of the operated objects, the Embryos injected are on the order of 1 mm in diameter, hence work is conducted by looking through a microscope. In order to release technicians from this laborious work and facilitate cell injection, researchers are trying to design and build systems that can perform cell injection automatically with the least human intervention. Therefore, a system which has the ability to handle this whole process automatically is needed. Many ideas to achieve these objectives have already been put forward by researchers, however, many of the proposed ideas are either too expensive or have low efficiency in terms of the overall processes.

1.2 Research Motivation

An automatic system is required to aspirate cells, to transfer cells, to immobilize cells, to inject cells and then to release them automatically. Attempts have been made to locate and immobilize

cells well and automate the entire cell injection process, however, much work remains to be done. A cell-transfer-cover and a cell-holder have been fabricated and a cell injection system has been set up to look into the performance of the newly created device. The system proposed overcomes all these drawbacks and will eventually make a great contribution to cell study.

1.3 Research Objective

To invent devices named cell-transfer-cover and cell-holder in order to realize an automatic cell injection system—precisely, reliable, high through-put, no human interference and more efficiency. The proposed system would accept 8 cells every time, which are easily to be immobilized on cell-transfer-cover, to be transferred between the cell-transfer-cover and the cell-holder, and to be released from cell-transfer-cover, within just a few seconds.

1.4 Thesis Outline

Chapter 1 and chapter 2 give the information and background regarding cell injection and related techniques. Some cell patterning systems have been discussed in chapter 3. In chapter 4, simulations carried out on FLOW-3D makes a comparison of different cell patterning systems. Experiments have been implemented in chapter 5 to prove that the cell-transfer-cover and cell-holder system is able to smooth the whole process of cell injection and finally speeds up cell injection. Conclusions in chapter 6 are drawn finally.

Chapter 2
BACKGROUND AND LITERATURE REVIEW

2.1 Biological Cell Injection

Biological cell injection technology has been accepted as one of the most important bio-material transfer techniques in gene injection[1], in-vitro fertilization (IVF)[2], intracytoplasmic sperm injection (ISCI)[3-4] and drug development[5]. There are basically two types of cells, adherent cells and suspended cells [6]. Adherent cells are adherent to walls while suspended cells are free to move in liquid. There are already many commercial systems for adherent cell injection, but almost none is suitable for suspended cells. Initially, even now most cell injection tasks are performed manually. Operators conduct a variety of different tasks readily through the use of tele-manipulation systems [7]. Based on the image presented on a computer screen, technicians manipulate the operating joystick to control the movement of micromanipulators. However, these proposed solution methods [8-10] to the cell injection problem have been unable to meet the high demand of industry. Existing non-fully automatic commercial systems require professional technicians to carry out injections on suspended cells. Typically technicians need at least one year of intense training to have an intimate knowledge of cell injection [11]. However, technicians can easily get tired during such intensive task execution, especially when processing hundreds of cells. In addition, manual operations never guarantee the processes of accuracy or repeatability. Hence, a reliable cell injection system so that large scale cell injection tasks can be realized is needed.

In recent years, an increasing number of research groups [8] [12-15] have been devoted to investigate the automatic injection of suspended cells. Most micro-operating systems [7] take visual closed-loop feedback as the control strategy. An image processor processes real time images to calculate

pose information. The drawback is that each cell has to be held by a holding tube, which limits the efficacy of whole cell injection process. Similarly, the automatic suspended cell injection systems [14] [16] [17] are also complicated to use and the injection tasks are time consuming. Like automatic adherent cell injection [18], a robotic cell injection system [19] decouples the cell injection task into two relatively independent control processes: the position (vision) control in the horizontal (*X*-*Y*) plane and the force control in the depth direction (*Z*-axis), in which cells are held by a special cell-holder without any holding tube.

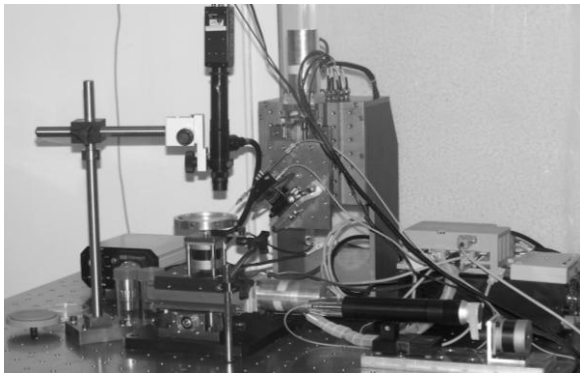

Figure 2.1: A laboratory test-bed cell injection system. [17]

2.2 Strategies to Immobilize cells

The freedom of the suspended cells in liquid imposes a negative effect to the success of cell injection. Then how to immobilize cells efficiently without any damage is critical in cell injection. Recently several specialized cell-holders have been proposed to immobilize suspended cells during cell injection. Huang [17] invented a cell-holder where holes to trap cell in a circular array are located, and the holder is immobilized on an actuated rotary plate. Wang [18] presents a vacuum-based embryo holding device and embryo can be trapped through a suction pressure at the backside of the device. Lu [20] developed a gel cell-holder with parallel V-grooves for automatic microinjection of Zebrafish embryos. Zhang [21] utilized fluidic self-assembly

technology to immobilize Drosophila embryos and realized parallel injection in the plane with two-dimensional embryo arrays. Fujisato[22] created a cell-holder made of microporous glass with sand-blasted micro-pockets holes.

2.3 Sensors in Cell Injection

2.3.1 Vision Sensor

Visual-servo control [23] is a fundamental instrument to overcome errors in micro-operation robot model and achieve automatic operations. Microscope vision images [23] are used as the input signal for a feedback-control system. The automatic cell injection processes start with the identification of the positions of zebrafish embryos and the injector pipette. In microinjection experiments, the zebrafish embryo is treated as an ideal sphere, and in the microscope image, a circular shaped embryo is visible. Hough-circle-detection (HCDA) [24] and the chord midpoint Hough transform (CMHT) [25] are two common methods applied in vision feedback control. Hough-circle-detection (HCDA) is used to find a circular object such as the cell, which can be created by using the same kernel [26]. However, this traditional Hough transform is time consuming, which makes it difficult for real time tracking of zebrafish embryos. A faster and more precise method called the chord midpoint Hough transform (CMHT) is proposed to improve the efficiency and accuracy of detection in an image. In reality, the horizontal movement of the zebrafish embryo is easily tracked, while the vertical movement of the injector cannot be observed directly unless a two microscope system is used. The depth of penetration of the through a planar visual feedback [16] [17] is used to estimate injection force. However, this approach is not robust to the uncertainty of dynamic parameters of cells. Several other visual-based force control systems [16] [27-30] have been developed to estimate forces applied to cells using the contour data as visual signal.

2.3.2 Force Sensor

Image-based visual-servo control is currently the most popular method in micro operations, but it is focus-sensitive when refer to vertical situations. Hence, researchers have used force feedback as a substitute for vertical visual feedback. With a combination of signals from vision feedback and force feedback, the desired automatic cell injection can be achieved successfully [31]. Huang [32] analyzed cell models to determine the relationship between the injection force and the cellular deformation.

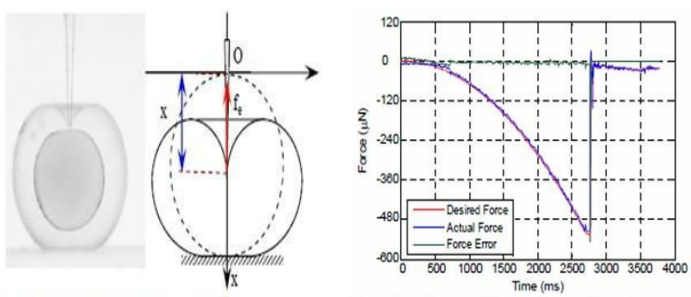

Figure 2.2: Deformed cell under pressure of needle and actual force trajectory **[32]**

It can be seen from the above figure that when the cell is penetrated, the force that is measured by a micro-force sensor mounted on the injector pipette changes dramatically, which can be detected easily and used as a signal to stop the injection process. Researchers [33-36] demonstrated that a pipette, bonded on the tip of a PVDF sensor, could be used to detect the injection forces in fish egg. Sun *et al.* [37] developed a MEMS-based cellular force sensor to investigate the mechanical properties of mouse oocyte. Zhang *et al.* developed a micrograting-based injection force sensor [38]. Arai *et al.* [39] developed a micro tri-axial force sensor with piezoresistive strain gauge.

Chapter 3
CELL PATTERNING SYSTEM DESIGN

3.1 Introduction

In this Chapter, we briefly introduce the cell injection equipment used in the work presented in this thesis. We then propose a novel design to select individual suspended cell floating in a fluid, and present them on a stage for injection. This novel design is synthesized based on a 'lottery ball machine' in which lottery balls float in an air stream, and one lottery ball is trapped in an outlet port. In the case of embryos - the embryos float in a fluid flow, and they are selected in an outlet port, for deposition on a circular cell presentation or patterning device. Simulations will be given on the next chapter.

3.2 Cell Injection Process

With respect to the introduction of bio-material into cells (transfection), microinjection is a highly efficient technique amongst existing methodologies. To simplify the primary automatic cell injection system, all cells to be experimented with should be similar each other, i.e. properties such as mass, volume and species. Usually embryonic cells of zebra fish are chosen as the experimental subject because of their excellent biological and mechanical properties. Zebra fish shares similarities in the genome with higher vertebrates. As well as the embryos being easily obtainable, they are translucent, can be easily generated, and are low cost. The diameter of a zebra fish embryo is approximately 1200μm including the chorion and 600μm without the chorion.

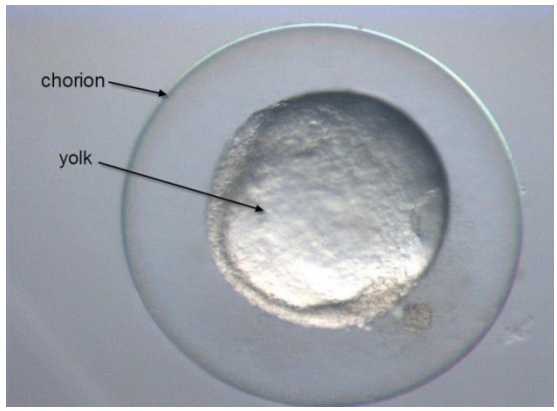

Figure 3.1: The structure of a zebra fish cell

Fig.3.1 illustrates the structure of a zebra fish embryo. As pointed in the figure, the chorion is the outermost membranous sac enclosing the zebra fish embryo and the centrally located yolk is nutritive nutrition for the embryo. The design in this thesis will be based on the size of zebra fish cells because of its widely application in research. The following give average attributes of an individual zebra fish embryo:

$$d_{diameter}=1.2mm \quad \cdots\cdots(3.1)$$

$$\rho_{cell}=1.043g/cm^3 \quad \cdots\cdots(3.2)$$

$$m_{cell}=\rho_{cell}V_{cell}=1.043g/cm^3\times\frac{4}{3}\pi(d_{diameter}/2)^3\times(0.6\times10^{-3})^3=0.9436\times10^{-3}\ g \quad \cdots\cdots(3.3)$$

$$G_{cell}=m_{cell}g=0.9436\times10^{-3}\ g\times10m/s^2=0.9436\times10^{-5}\ N \quad \cdots\cdots(3.4)$$

Where $d_{diameter}$、ρ_{cell}、m_{cell} and G_{cell} refers to the diameter、the density、the mass of a newly produced zebra fish embryo respectively, *g* is the acceleration due to gravity.

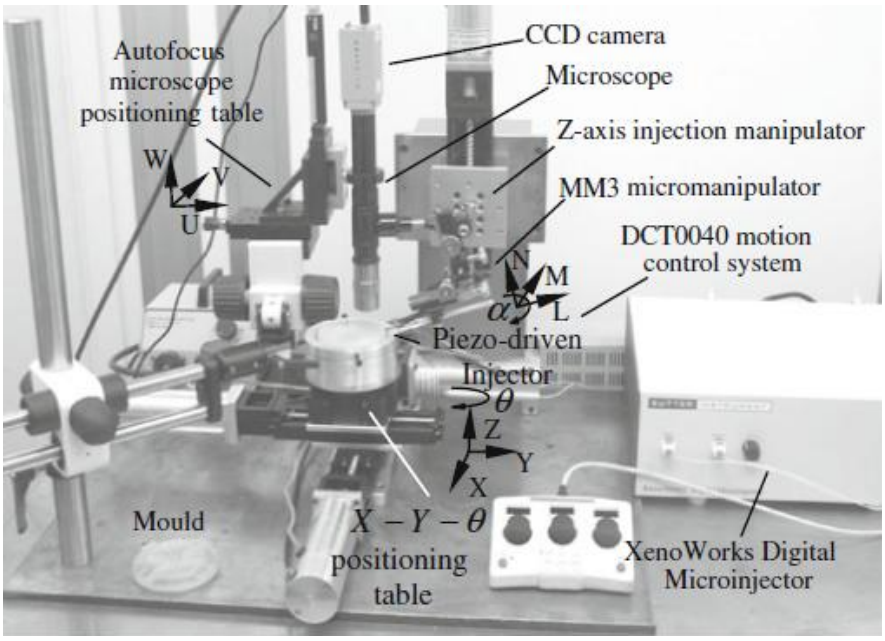

Figure 3.2: Test-bed for the suspended cell injection system [40]

We have conducted experiments [41] in our laboratory in order to investigate the properties of zebra fish and the performance of equipment designed to facilitate cell injection. Figure 3.2 shows a system using a novel piezo-driven cell injector for automated suspended cell injection [17]. The basic components are a specialized designed cell-holder、a CCD camera、a microscope、an automatic positioning table、 an MM3 micromanipulator and a XenoWorks digital micro injector. A fine injector needle must be fabricated. Cells are placed on a specialized circular cell-holder before cell injection. Bio-material has been injected into hundreds of cells that developed into grown fish verifying the functionality of the injection system.

3.3 Design of Cell Preparation and Patterning Stage

Many of the existing automatic cell injection systems are not fully automated; hence an operator must perform some steps prior to automatic execution of others. This has a significant impact on cell injection in terms of efficiency of operations and survival rate of cells injected. Examining

the case of embryonic cells of zebra fish for an example, the shapes of these cells are different from solid sphere in many aspects. The cells are relatively soft、viscous and deformable. Zebra fish embryos are vulnerable to the effects of mechanical shear stress; therefore a method to handle the cells in a gentle manner to position and prepare the cells for injection is required.

A revolutionary system has been proposed here in this thesis. This new system is simple, economical and easy to set up. The advantage of this system is that this system does not required operator intervention, hence it is fully automatic. The only task technicians need to do is to pour cells into a large cell container. Then cells can be selected, transferred, immobilized and released through the system automatically. The mechanism of operation of the system is similar to that of a lottery machine, where lottery balls are drawn out from the bottom to the upper end of the device. Assuming zebra fish embryos are similar to the lottery balls, we have developed a design concept to select embryos and position them which can solve the embryo handling and placement problem in an interesting and efficient manner.

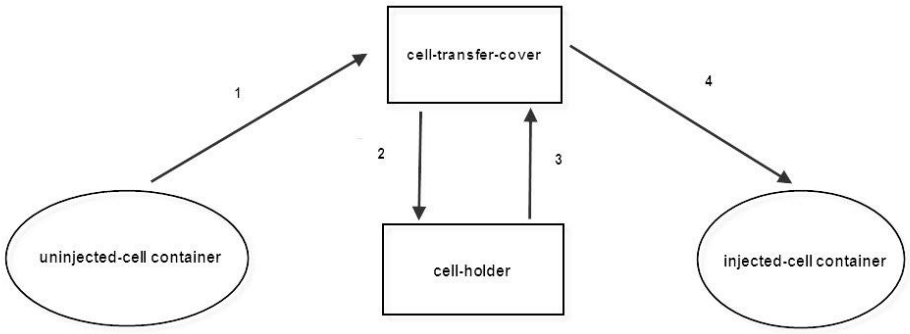

Figure 3.3: The route cells experience in a cycle of cell injection

Each cell will experience four main steps during a cycle of cell injection process as shown in Fig.3.3. Step 1: cells poured into the un-injected-cell container initially are aspirated by the cell-transfer-cover; Step 2: cells to be injected on are then released from the cell-transfer-container to

the cell-holder; Step 3: cells injected on cell-holder are aspirated back again by the cell-transfer-cover; Step 4: cells on the cell-transfer-cover will then be finally released into a injected-cell container to complete a cycle of cell injection.

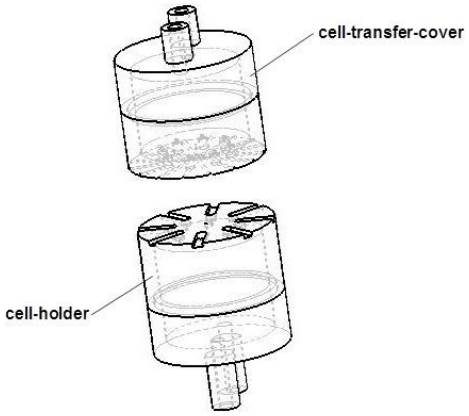

Figure 3.4: Assembly of the cell-transfer-cover and the cell-holder: 1.cell-transfer-cover; 2.cell-holder.

In order to realize large-scale and high-efficient automatic cell injection, the system proposed in Fig.3.4 provides an intuitive idea of a simple structure of a cell-transfer-cover and cell-holder system. The cell-transfer-cover is the upper part in this figure, which is designed to aspirate and release cells by the adjustable pressure inside the chamber. The cell-holder, shown in the lower part in this figure, is a platform for cell injection by immobilizing cells released from cell-transfer-cover. The proposed cell-transfer-cover and cell-holder cooperate together to conduct cell transfer among cell containers, cell-transfer-cover and cell-holder, which is a critical process of cell injection. All the other processes in cell injection are based on this cell transferring process.

3.4 Cell Aspiration

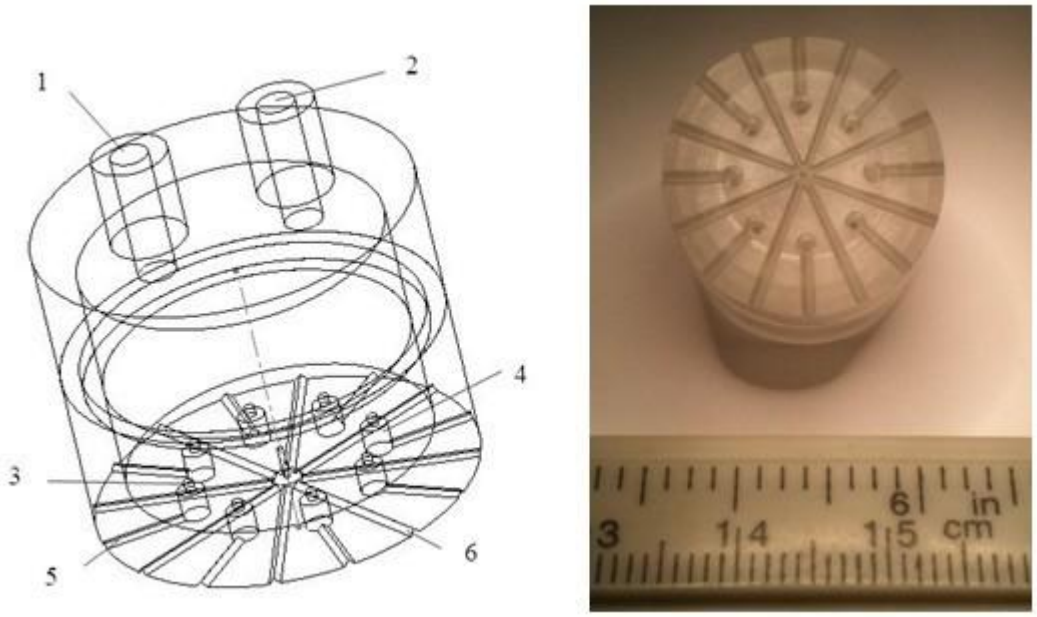

Figure 3.5: Cell-transfer-cover：1.Cell aspirating port (Ø=2mm）; 2.Cell pushing port（Ø=2mm）; 3.Cell supporting hole（Ø=0.5mm）; 4.Cell holding holes（Ø=1.4mm）; 5.6. Liquid releasing grooves.

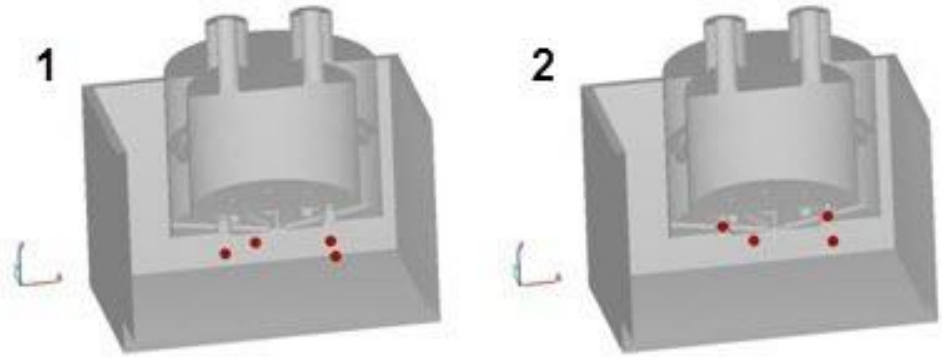

Figure 3.6: Cross-section view-the first and last state of cell aspiration process

The left side of Fig.3.5 illustrates a 3D transparent model of the cell-transfer-cover with the right hand figure in Fig. 3.5 the corresponding real model made from polycarbonate, an ideal material in this situation because it is optically transparent, biocompatible, inexpensive, and easily machined. This cell-transfer-cover transfers cells between cell containers and cell-holder.

The through holes labeled 3 and 4 on the cell-transfer-cover are to hold cells which are approximately 1.2mm in diameter. The distribution pattern shows eight through holes located at the bottom of cell-transfer-cover, which is the same as that on cell-holder. Hence a seamless cover between surfaces of the cell-transfer-cover and the cell-holder can be realized preventing cells from escaping when the two halves are placed together. Port 1, which connects to an inlet port of a pump, generates a negative pressure inside the chamber of cell-transfer-cover to aspirate cells from the cell container. Port 2, which connects to an outlet port of another pump, generates a positive pressure inside the chamber of cell-transfer-cover to release cells held at cell holding holes, labeled 4. Cell supporting holes, labeled 3, stop cells from entering into the chamber of cell-transfer-cover because of its smaller diameter than that of a cell. Cell holding holes, labeled 4, are to locate and hold cells stopped there. Liquid release grooves, labeled 5 and 6, give a path for liquid from the chamber to release to the outside when the pump at either port 1 or port 2 is working. Fig. 3.6 illustrates how the cell-transfer-cover aspirates cells from a cell container. Cells will finally be stopped by the cell supporting holes, labeled 3, and then remain at cell holding holes , labeled 4.

3.5 Cell Transfer

The fact that cells continue developing during the process of cell injection requires that automatic cell injection must be carried in a short time. Ideally, the physical characteristics of cells to be injected should remain approximately unchanged during cell injection. Hence, how to safely, quickly and efficiently transfer cells from cell container to cell-holder is very important in automatic cell injection. The mechanism of how cells are transferred is explained through the system shown in Fig. 3.7, where the cell-transfer-cover and cell-holder collaborate to transfer cells between them without the use of other equipment.

$$F_{aspirating}=ps=p\pi(d_{cell}/2)^2=3.2\times9.80665\times1000\times\pi\times(0.6\times10^{-3})^2=0.03547N \quad \cdots\cdots\cdots\cdots(3.5)$$

The force generated by external pump can be controlled through a pump controller, which could send the signal of frequency (0HZ~ 255HZ) to the pump. $F_{aspirating}$ in equation 3.5 is the maximum negative force generated at one of the thorough holes on cell-transfer-cover when the frequency is 255. Compared the value of $F_{aspirating}$ with the value of G_{cell}, we note that $F_{aspirating}$ is adjustable to meet the force needed to overcome the gravitational weight of an individual cell. In real experiments, the cell transfer cover is able to aspirate cells within the frequency range from 100HZ to 200HZ.

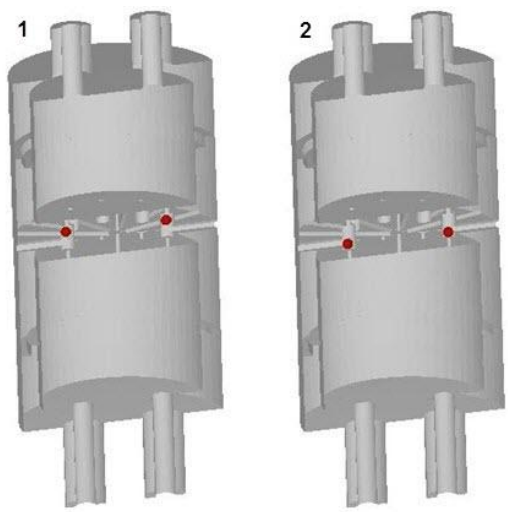

Figure 3.7: Cells are transferred between the cell-transfer-cover and the cell-holder.

Fig. 3.7 directly shows the manner in which cells are released from the cell-transfer-cover to the cell-holder; and vice versa. When cells are injected, cells will be transferred back from the cell-holder to the cell-transfer-cover. The cell-transfer-cover and cell-holder cooperate twice, as described above, during a complete cycle of cell injection. Firstly, the cell-transfer-cover will transfer cells from a large cell container onto cell-holder by aspirating cells and releasing them by the force generated at its two ports located on the top of the device. When all cells on the cell-

holder have been injected, the cell-transfer-cover will cover the cell-holder again and transfer the cells from the cell-holder to another cell container for cells injection.

3.6 Cell Holding

Typically cells may be exposed to the atmosphere or can remain partially covered by a liquid for approximately 10 minutes without any damage. Ten minutes is sufficient for cell injection to be carried out. On the other hand, a vision system, if used, required few interference if any bubbles etc. from a fluid partially immersing the cells, implying the cell are mainly uncovered by a fluid.

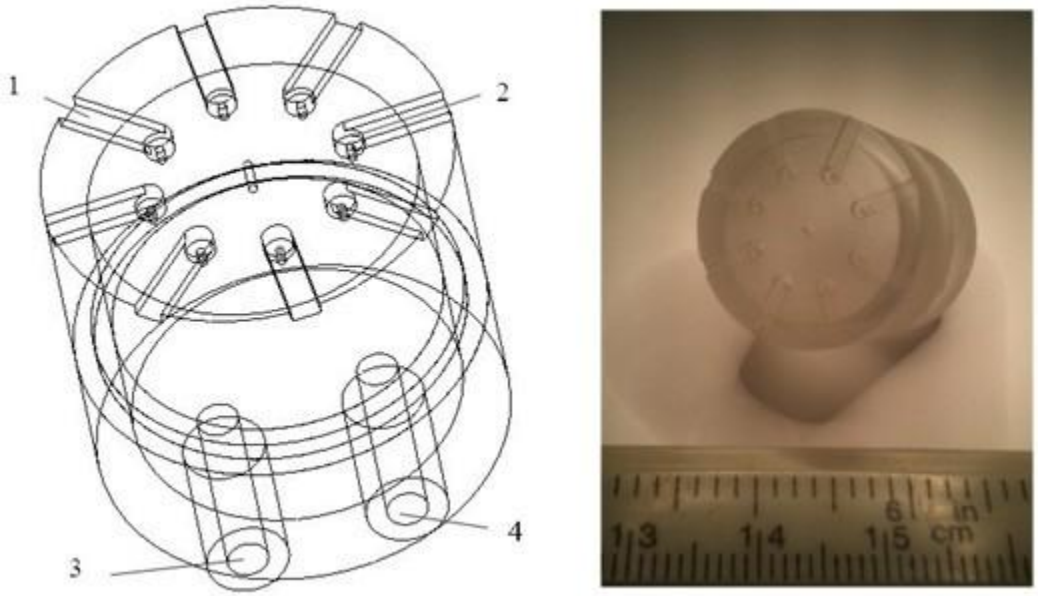

Figure 3.8: Cell-holder : 1.liquid releasing groove（width=2mm）; 2.cell holding hole（Ø=1.45mm）; 3.cell holding port（Ø=2mm）; 4.cell pushing port（Ø=2mm）

As shown in Fig. 3.8, the left side of Fig. 3.8 is a 3D transparent model of the cell-holder and the right side is the corresponding model fabricated using same material on cell-transfer-cover. This cell-holder is designed with eight through holes surrounding its edge to immobilize cells. As discussed above, the cell-holder receives cells released from the cell-transfer-cover and transfers

them back when cells are injected. There are two functions of the liquid releasing grooves, labeled 1, in Fig.3.8: (1) to release excess liquid when cells are moving between cell-transfer-cover and cell-holder; (2) to give a convenient path for the injection needle to follow for cell injection. The cell holding holes, labeled 2, exactly match the distribution with those on the cell-transfer-cover. The cell holding port, labeled 3, that is connected to a pump inlet immobilize cells when carrying out cell transfer and cell injection. The cell pushing port, labeled 4, connected to an outlet of second pump, is to push cells back to the cell-transfer-cover after the cells are injected.

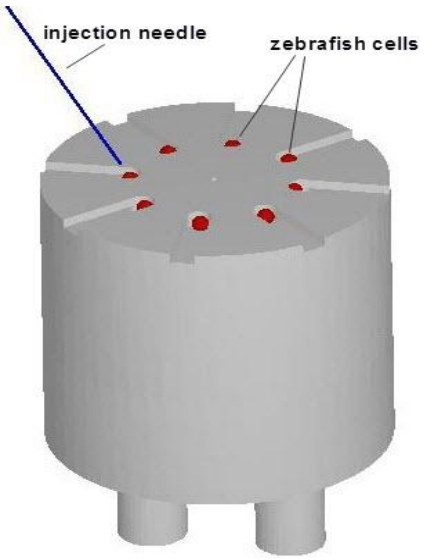

Figure 3.9: Cells on the cell-holder stage are ready to be injected.

As seen in Fig. 3.7, when the holes on both parts are aligned properly, cells held by the cell-transfer-cover will be ready to drop onto the corresponding holes on this cell-holder. Cells on cell-holder will be exposed to the atmosphere when the cell-transfer-cover moves away as shown in Fig.3.9. This facilitates the injection needle approaching the cells to carry out cell injection. When all cells are injected, the cell-transfer-cover covers the cell-holder again. Cells are then

transferred from the cell-holder to the cell-transfer-cover and then be released to another cell container to hold injected cells.

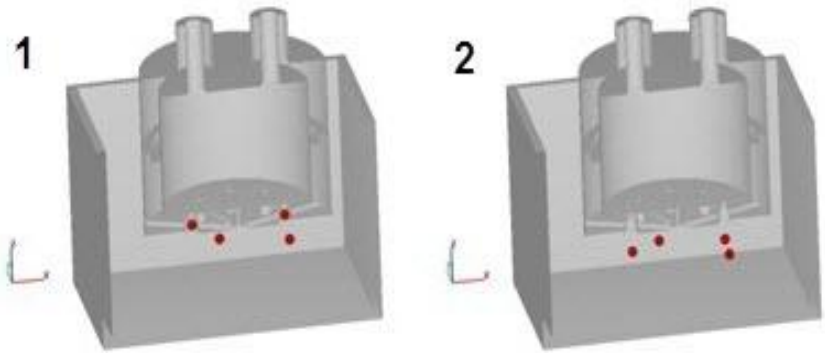

Figure 3.10: Cells injected are finally released into an injected-cell container.

Chapter 4
SIMULATIONS OF CELL PATTERNING DESIGNS WITH FLOW-3D

4.1 Introduction

In order to best understand the properties and advantages of the cell patterning system shown in Chapter 3, a comparison of three other designs [42] for cell separation is discussed in this chapter. Simulations have been conducted on Flow-3D software to investigate the performance of each cell patterning system design.

4.2 Comparison of Other Cell Patterning Systems

4.2.1 Traditional cell holding device

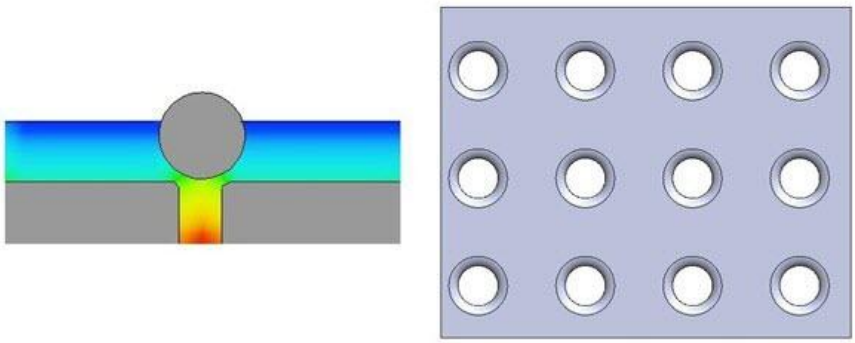

Figure 4.1: The traditional cell patterning method to immobilize cells

The cell patterning system shown in Fig.4.1 is a traditional way to immobilize cells [43] [44] [45]. Holes are located on a flat plate. When cells approach these holes, cells move from the top of the fluid stream to the bottom. This is an ‘up-to-down’ process. Eventually each cell will fit a hole, and is immobilized by a small suction force from a vacuum pump. Although this method is easily realized for cell injection, it is difficult to control the numbers of cells poured onto the cell-holder, and because of the influence of gravity on cells and fluid flow, suspended cells tend

to gather together when approaching these holes. Hence, cells on the cell-holder likely require human intervention to help separate them one by one. Hence, in a sense, this is a semiautomatic process.

4.2.2 Cell Separation Device

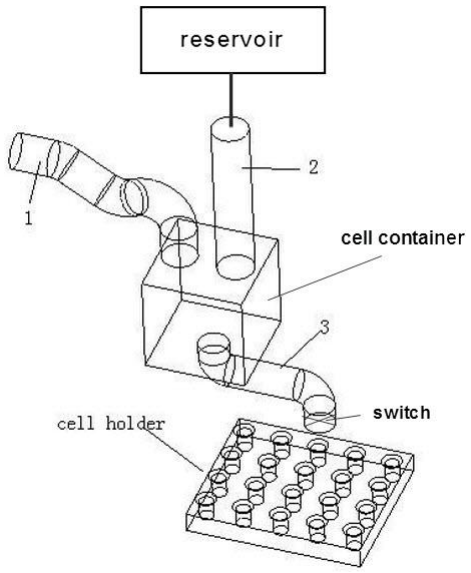

Figure 4.2: The model of the cell separation device with a cell-holder

Figure 4.2 illustrates a cell separation device investigated in this work. There are three tubes labeled *1*, *2*, and *3* connecting the cell container. The left curved tube 1 is used to load cells continuously into the container. Tube 1 is not straight so that the cells can be separated here preliminarily because of this curved shape; Tube 2, with a straight geometry, is connected to a reservoir on the top of the cell container, to ensure that the container remains full of fluid at all times and also generate a fluid pressure so that cells can move forward through the system; tube 3 at the bottom of the cell container, extends to a specialized cell holding device, on which each hole is connected to a suction pump to immobilize corresponding cells. There is mechanical switch at the end of tube 3 to control the cell dropping process.

With the help of the fluid pressure generated by the reservoir above tube 2, the switch at the end of the tube 3 and the cell holding device works together to place cells one by one. At the same time, more cells are continuously being loaded into this container through tube 1. When the mechanical switch on tube 3 is opened, two situations will occur: if there is only one cell dropping out to the hole on the holding device, then the cell will be easily be trapped at this hole by the suction force generated by a suction pump; however, if there are more than one cell dropping down, then only one of the cells will be trapped at the designated hole, and the other cells will be flushed away by the fluid flow around the designated hole. These flushed cells can be collected later and reused through tube 1 again. As for the cell-holder, when one cell is trapped, the cell-holder moves one increment to receive another cell released from tube 3.

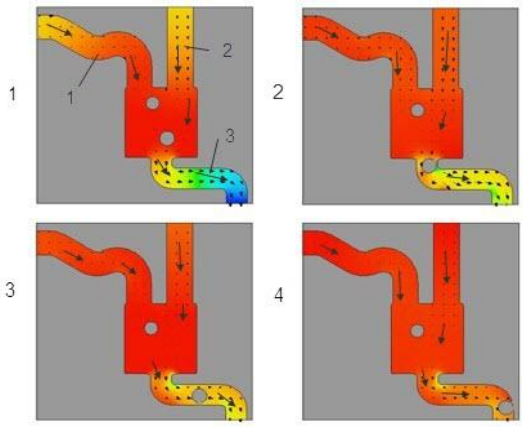

Figure 4.3: The flow simulation result of cell separation device on FLOW-3D

Figure 4.3 shows four instantaneous fluid flows at four subsequent times, and is the result obtained from fluid flow simulations on FLOW-3D software. The colors represent pressure of flow liquid inside the container. The darker the red color, the greater the fluid pressure. Fortunately, the pressure inside the container will remain at roughly a constant value. Arrows indicate the direction of fluid flow. As can be seen from these figures, there are four basic steps for cells to be separated: Firstly, one of the cells approaches the entrance of tube 3 and the other

cells move randomly in the chamber; secondly, the cell near the entrance enters into tube 3 and the other cells approach to the entrance of tube 3 like the first cell; thirdly, the cell inside tube 3 continues moving to the other end of tube 3 and some other cells enter into tube 3; finally, the first cell in tube 3 will be released to the designated hole on cell-holder and waits to be injected later on. This method guarantees the successful separation of cells. However, this separation process is time-consuming and further, it is difficult to clean the inside chamber of the cell container.

4.2.3 Automatic cell injection platform

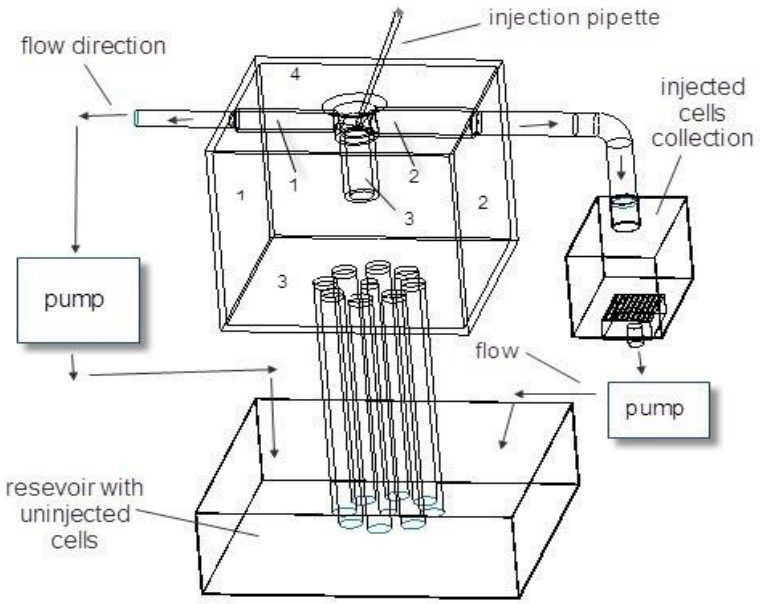

Figure 4.4: The platform of the automatic cell injection system

How to separate cells and immobilize them efficiently is considered as one of the most significant factors for automated cell injection. Figure 4.4 illustrates a new design to separate cells for injection considered in this work. Compared to the system in Fig.4.3, where cells must be transferred to a cell-holder to be injected after they have been separated by the system;, the

design proposed in Fig.4.4 can carry out all steps of cell injection within only one device. There are also three tubes labeled 1, 2 and 3. This platform will realize continuous cells placement for injection one by one automatically. The left surface in Fig.4.4 will be considered as surface 1; the right surface will be considered as surface 2; the bottom surface will be considered as surface 3; the top surface will be considered as surface 4. Tube 1 at surface 1 connects to a suction pump; tube 2 at surface 2 extends to a reservoir outside for collection of cells injected; holes on surface 3 transmits liquid and cells from another reservoir; meanwhile, these holes will effectively regulate flows inside the container to facilitate cells movement.

Initially, many, possibly tens to hundreds of cells (depending on the size of the container) are introduced into the container from the reservoir through surface 3. Then a pump at surface 1 will be switched on to aspirate liquid out from the container and complement liquid to the reservoir at surface 3. A liquid flow will form automatically which will guide the cells moving from the bottom to the top. Because of the influence of gravity on cells, they are easily separated by themselves when moving, which means these cells will enter into tube 3 one by one. Eventually there will be one cell stopped and immobilized at the entrance of tube 1 due to the smaller diameter of tube 1 than that of each cell. However, the pump at surface 1 continues working to resist forces when the cell is being injected. Then cell injection can then be performed through surface 4 with the cell emerged into liquid all the time to make it survival. When the cell injection is finished, with the cooperation of the pump at surface 2, the suction pump at surface 1 receives a signal, from a vision monitoring system, to switch off to release the injected cell from the container to the reservoir outside. From this time, another cell injection circulation is ready to begin.

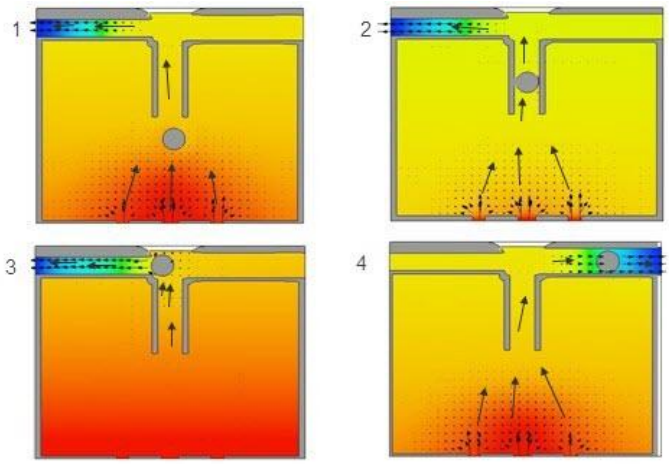

Figure 4.5: The simulation result of the automatic cell injection platform with FLOW-3D

Figure 4.5 illustrates the result obtained from carrying out flow simulations with FLOW-3D software. The colors represent pressure of liquid inside the container. Arrows show the direction of the fluid flow. Each cell experiences a similar route: Firstly, one of the cells enters into the vertical tube; secondly, the cell will be stopped at the left tube; thirdly, the cell injected will be released into the reservoir through the right tube; finally, a second cell will do what the first cell did described above. This system is highly efficient with no human intervention; however, the structure of the system is too complicated for economical fabrication.

4.2.4 Turntable to separate cell

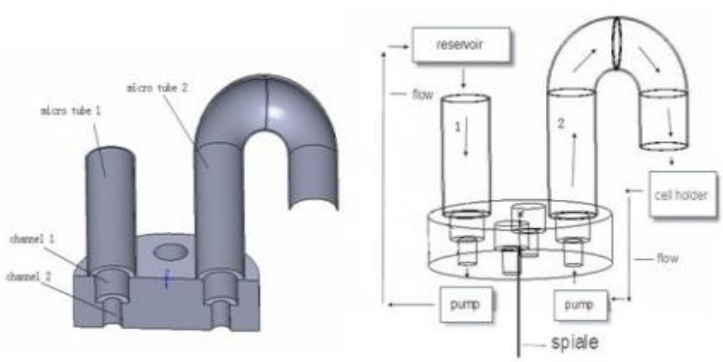

Figure 4.6: The section view and transparent model of the turntable

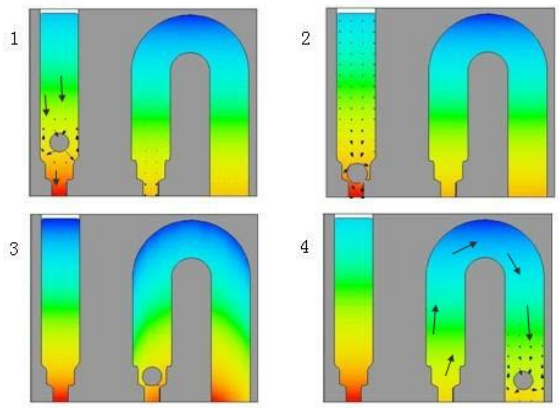

Figure 4.7: 2-D view of simulation result on the turntable device with FLOW-3D

Figure 4.6 provides another design to realize cell separation examined in this work. Micro tube 1 is designed to connect a reservoir at top with cells. Micro tube 2 is designed to connect a cell-holder. The diameter of the channel 1 and micro tubes is a somewhat larger than that of cells. This guarantees that cells pass through the micro tube one by one. And the design that the depth of channel 1 is a little bigger than the diameter of a cell will guarantee only one cell will be trapped at any time. Channel 2 is connected a pump outside to aspirate and release the cell trapped in channel 1. As long as one cell is trapped in channel 1, the turntable at the bottom will turn one increment. At this moment another channel 1 is ready to accept a new cell from micro tube 1. After another increment of the turntable, the initially channel 1 with a trapped cell is connecting to micro tube 2. Here will the cell be pushed through micro tube 2 to a cell-holder under the other end of micro tube 2. In this way, cells will transit one by one from the reservoir to the cell-holder for subsequent cell injection. Fig.4.7 shows simulation result of one cycle with FLOW-3D software. Similar to the results discussed above, colors represent the fluid pressure inside the container. Arrows show the direction of fluid flow. This design provides another methodology to efficiently separate cells. However, similar to the design in Fig.4.4, this design is too complicated for easy fabrication.

4.3 Simulations Done on Cell-Transfer-Cover and Cell-Holder System

Based on Chapter 3, simulations are implemented of this proposed system to determine how well the cell-transfer-cover and cell-holder system functions. Basically, three different simulations have been implemented: cell aspiration、cell transfer and cell releasing.

4.3.1 Working range

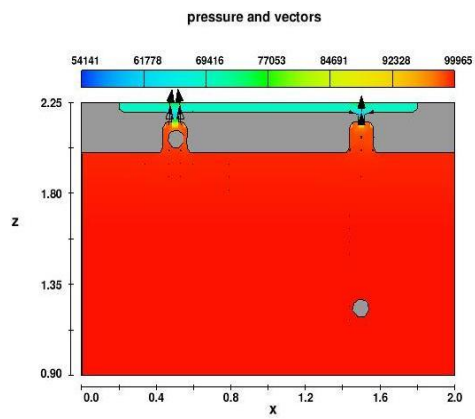

Figure 4.8: working range of the cell-transfer-cover

There is a limitation for the working range or depth of the cell transfer tank shown in Fig. 4.8 of the cell-transfer-cover in Fig.3.5 to aspirate cells inside a container. Simply stated, if the tank is too deep, there is insufficient suction to draw cells to the outlet port. A program has been set up to simulate the movement of cells inside a cell container. After a number of trials with FLOW-3D, the working distance is found to be around 8 times of the diameter of a regular cell.

4.3.2 Simulations on cell aspirating

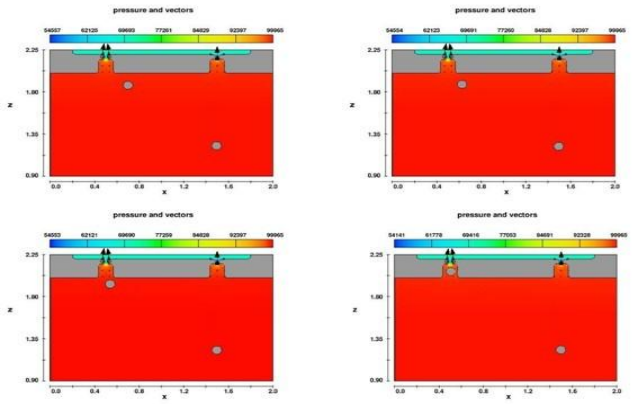

Figure 4.9: results of cell aspirating through FLOW-3D software

Cell aspiration is the first step required for cell injection. Fig.4.9 is the result obtained from simulations with FLOW-3D software. Fig. 4.9 shows the cross section view of the system shown in Fig.3.6, in which cells are moving towards corresponding holes on the cell-transfer-cover. These four instantaneous figures verify that this cell-transfer-cover is able to successfully aspirate cells from a cell container and keep them at the holding holes labeled 4 at Fig.3.5.

4.3.3 Simulations on cells transferred between cell-transfer-cover and cell-holder

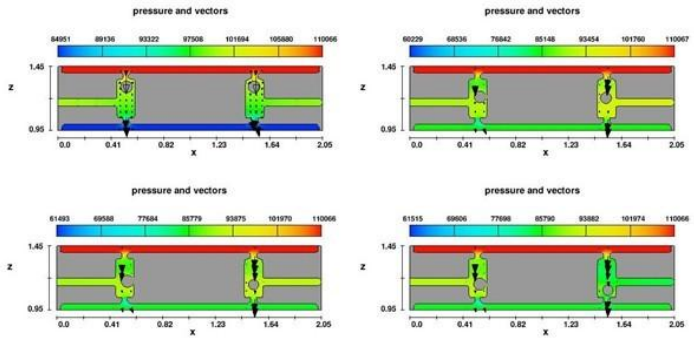

Figure 4.10: cells are been transferred from cell-transfer-cover to cell-holder

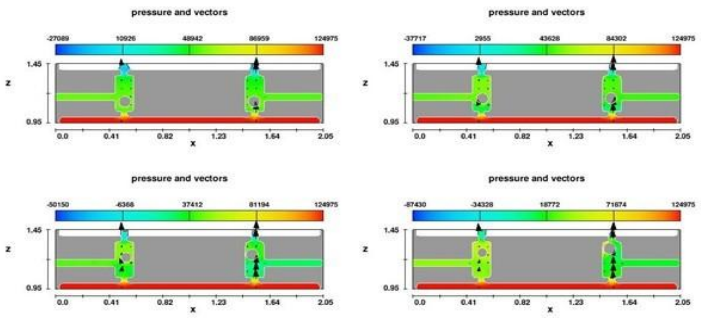

Figure 4.11: cells are been transferred from cell-holder to cell-transfer-cover

Both Fig.4.10 and Fig.4.11 is the cross sectional views of the system in Fig.3.7 for better analysis. The arrows indicate the direction of fluid flow. The colored bars indicate the pressure inside the chamber, which is nearly constant through the whole process. Fig.4.10 shows that cells are transferred from the cell-transfer-cover to the cell-holder. When cells have been injected on the cell-holder, Fig.4.11 shows the inverse process in which cells are been transferred back from the cell-holder to the cell-transfer-cover to be released at the next step. Through the results of above two figures, it is believed that this combination of two devices will work well on real experiments.

4.3.4 Simulations on cell releasing

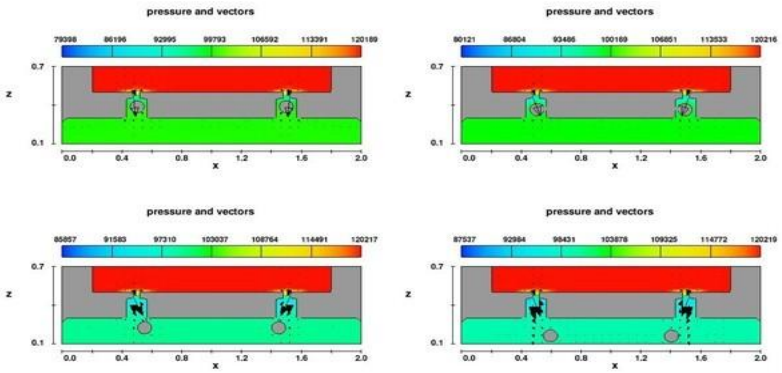

Figure 4.12: Simulations of Cell Releasing

Cell release is the last step during a cycle of automatic cell injection. Similar to process of cell aspiration, Fig.4.12 is the results obtained from simulations on FLOW-3D software. With the increased pressure inside the chamber of the cell-transfer-cover, cells will be released out into the cell container gradually. This step is much faster and easier compared to cell aspirating. At this moment, a cycle ends and another cycle begins.

Chapter 5
EXPERIMENTS ON CELL-TRANSFER-COVER AND CELL-HOLDER SYSTEM

5.1 Introduction

With the necessary information collected through the previous chapters, experiments have been done to verify the proposed cell-transfer-cover and cell-holder system. Videos have been recorded for the processes of cell aspiration and cell releasing. However, the process how cells transferred between the cell-transfer-cover and the cell-holder cannot be recorded due to equipment limitations. An automatic model is given at last as a future work.

5.2 Experiments on the Cell-transfer-cover and Cell-holder System

Here three types of experiments have been implemented. They are: cell aspiration, cell transfer between the cell-transfer-cover and the cell-holder and cell releasing. Results from these experiments demonstrate that the cell-transfer-cover and cell-holder system works well as designed.

5.2.1 Cell aspiration

Cell aspiration is the first step during the whole cycle of cell injection. Cells are aspirated to the cell-transfer-cover from a cell container. The following Fig.5.1 displays the system for cell aspiration, which consists of a cell-transfer-cover、a cell container with cells、a camera、a suction pump and a pump controller.

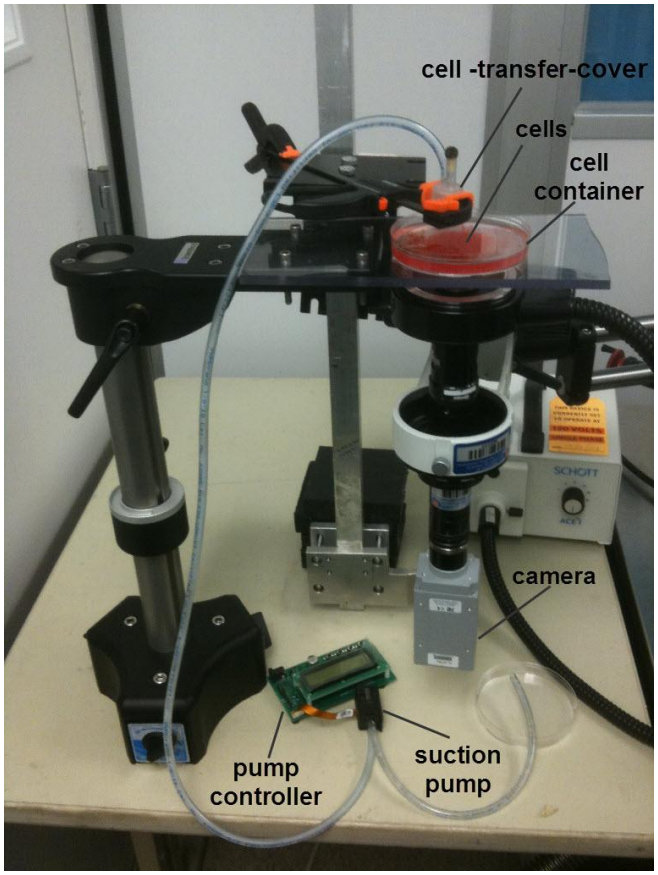

Figure 5.1: System set-up for cell aspiration

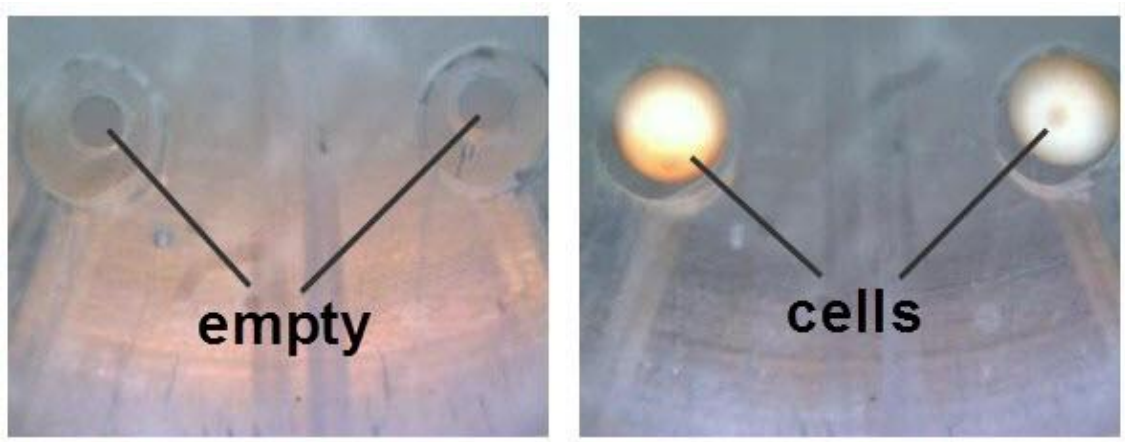

Figure 5.2: Cell aspiration-Results from experiments: the left picture shows the beginning state while the right one shows the last state of cell aspiration.

Fig.5.2 illustrates the results obtained from experiments, which shows the first and last moment of the cell aspiration process. Before the pump is turned on, it can be seen from the left picture

that the holes of the cell-transfer-cover are empty; after a few seconds when the pump is turned on, the right picture shows that two cells are been located at the corresponding holes. This cell-transfer-device works highly efficient in experiments, which is able to aspirate cell with a success rate nearly of 95%.

5.2.2 Cells are transferred between the cell transfer and the cell-holder

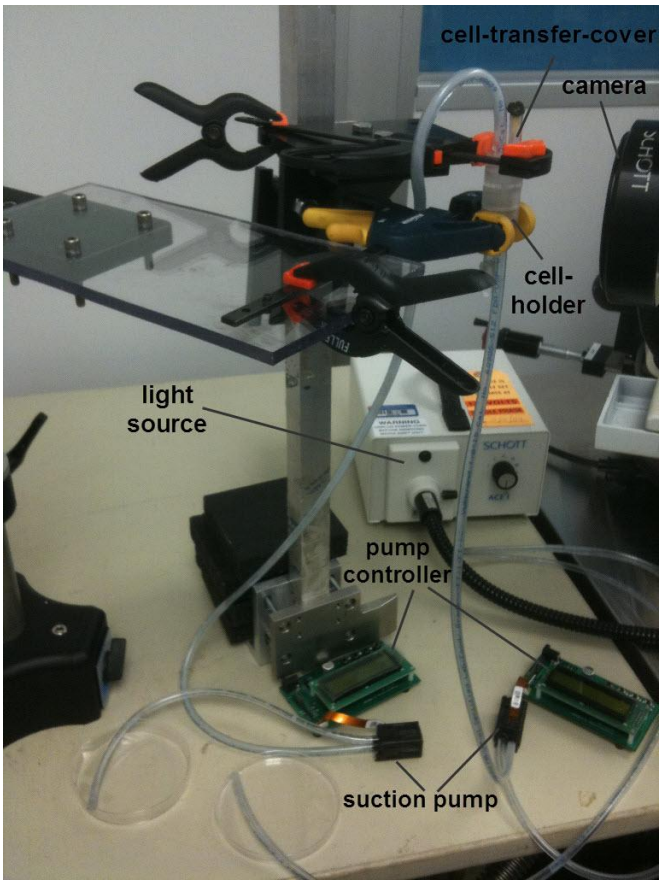

Figure 5.3: System set-up for cell transfer between cell-transfer-cover and cell-holder

Fig.5.3 displays the system for cell transfer between the cell-transfer-cover and cell-holder, which consists of a cell-transfer-cover、a cell-holder、a camera、two suction pumps and two pump controllers. Cells are been transferred from the cell-transfer-cover to the cell-holder or from the cell-holder to the cell-transfer-cover through this system. Because it is difficult to

record what happens inside the cell-transfer-cover and cell-holder, no figures of this process can be captured. However, experiments verify that cells can successfully be transferred between the cell-transfer-cover and the cell-holder.

5.2.3 Cell releasing

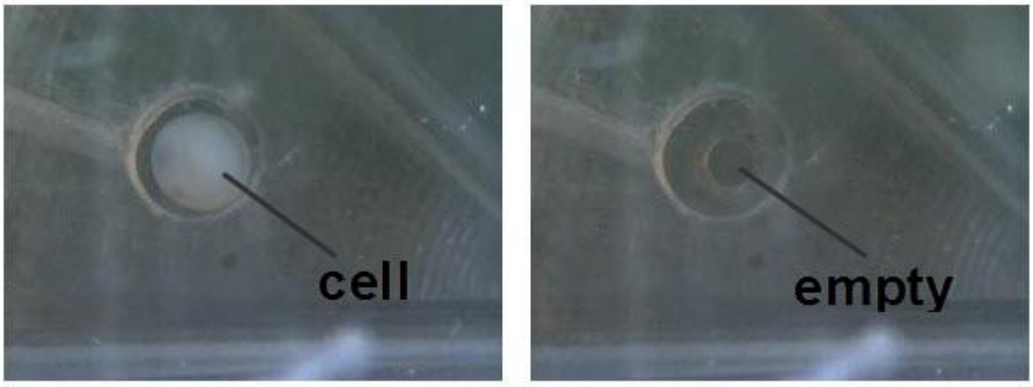

Figure 5.4: Cell Releasing-Results from experiments; the left picture shows the beginning state while the right one shows the last state of cell releasing.

When cell are injected on the cell-holder, cell release is the last step. The system used to release cells on the cell-transfer-cover is similar to the system displayed in Fig.5.1. The only difference is that the pressure here inside the chamber of the cell-transfer-cover changes from negative to positive to push cells out from the cell holding holes labeled 4 in Fig.3.5. Similar to process of cell aspiration, Fig.5.4 is the result obtained from experiments. With the increased pressure inside the chamber of the cell-transfer-cover, cells held at the cell holding holes are pushed out into the cell culturing container gradually. This step is much faster and easier than that of cell aspiration. Fig.5.4 provides an intuitive visual comparison between the starting state and last state of one hole on the cell-transfer-cover. Initially, a cell is held at the hole. When the cell-transfer-cover moves to the cell culturing container and a pump connecting to the push port

labeled 2 in Fig.3.5 has been switched on, a cell is released off the hole as shown on the right picture of Fig.5.4. At this moment, this cycle ends and another cycle begins.

Chapter 6
CONCLUSIONS

6.1 Summary

The focus of this thesis lies in the development of an autonomous cell injection system capable of manipulating large numbers of suspended cells automatically. Cell motion determined based on the simulations carried out with FLOW 3D software show good performance of the proposed cell-transfer-cover and cell-holder system. The cells are found to move in a particular route inside the proposed cell containers. Experiments verify that cells can be aspirated、transferred and released successfully through this cell-transfer-cover and cell-holder system. Thanks to the cell-transfer-cover and the cell-holder, cell injection will easily be speeded up dramatically, as well as extrication for technicians from laborious work.

6.2 Future work

6.2.1 Assemble of cell-holders

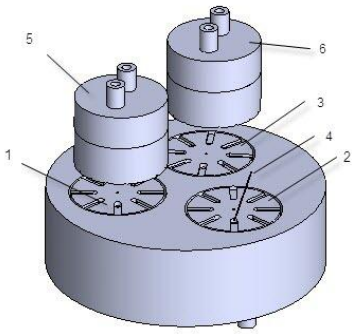

Figure 6.1: Assemble of cell-holders and cell-transfer-covers for reality use. 1. Cells loading part; 2. Cell injection part; 3. Cell releasing part; 4.injection needle; 5, 6. Cell-transfer-covers

What discussed in previous chapters is all at lab stage within a small amount of cells. For the purpose of efficiency in cell injection, like 200 cells to be injected in 20 minutes, here a new design which is much more close to reality use is proposed. There will be three cell-holders assembled on a cell-holder support. Three of them work simultaneously to fast the overall cell injection processes. Each of the three cell-holders will be controlled by separated motors under a center control system to coordinate the overall process. For example, at one moment, the cell-holder 1 is used to receive cells released from a cell-transfer-cover labeled 1; the cell-holder 2 provides a venue for cell injection, where an injection needle (labeled 4) is above one hole; the cell-holder 3 is used to transfer the injected cells back to another cell-transfer-cover labeled 6, so that these cells could be released to a culturing container after then.

6.2.2 Cell rotation

Sometimes bio-material needs to be injected in a specific area inside cells for research purpose. Cell rotation gives a convenient way to precisely piercing. However, current systems cannot be able to rotate single cells freely. Nowadays some researchers are trying to use the torque generated by electric fields [47] or light pressure [48] to rotate a single cell, and these technologies could be applied on current cell injection system to improve the overall performance of cell injection. Hence, it is worthy of great value to do research on freely cell rotation.

References

[1]. J. Kuncova and P. Kallio, "Challenges in Capillary Pressure Microinjection", Proc. IEEE Int. Conf. of EMBS, pp. 4998-5001, 2004.

[2]. Y. Sun and B. J. Nelson, "Biological cell injection using an autonomous microrobotics system," The Int. Journal of Robotics Research, vol. 21, pp. 861-868, 2002.

[3]. K. Yanagida, H. Katayose, H. Yazawa, Y. Kimura, K. Konnai and A. Sato, "The usefulness of a piezo-micromanipulator in intracytoplasmic sperm injection in humans," Human Reproduction, vol. 14, no. 2, pp. 448-453, 1998.

[4]. K. K. Tan, D. C. Ng and Y. Xie, "Optical intra-cytoplasmic sperm injection with a piezo micromanipulator," The 4th World Congress on Intelligent Control and Automation, pp. 1120-1123, 2002.

[5]. T. Nakayama, H. Fujiwara, K. Tastumi, K. Fujita, T. Higuchi and T. Mori, "A new assisted hatching technique using a piezo-micromanipulator," Fertility and Sterility, vol. 69, no. 4, pp. 784-788, 1998.

[6]. P. Kallio and J. Kuncova, "Manipulation of Living Biological Cells: Challenges in Automation," presented at the workshop on Microrobotics for Biomanipulation in the Int. Conf. on Intelligent Robots and Systems, Las Vegas, USA, 2003.

[7]. Shusheng bi, Guanghua Zong, Wei Zhao, Xudong Li, "Recent Progress in Micro-manipulation Technology," Science Foundation in China, Vol.3, 2001, pp.153-157.

[8]. S. Yu and B. J. Nelson, "Microrobotics cell injection," IEEE Int. Conf. on Robotics and Automation, pp. 620-625, 2001.

[9]. L. Mattos, E. Grant and R. Thresher, "Semi-automated blastocyst microinjection," IEEE Int. Conf. on Robotics & Automation, pp. 1780-1785, 2006.

[10]. K. K. Tan and S. C. Ng, "Computer-controller piezoactuator for cell manipulation," IEE Proc.-Nanobiotechnology, vol. 150, no. 1, 2003.

[11]. A. Pillarisetti, W. Anjum, J. P. Desai, G. Friedman and A. D. Brooks, “Force feedback interface for cell injection,” Proc. of the First Joint Eurohaptics Conf. and Symposium on Haptic Interfaces for Virtual Environment and Teleoperator Systems, 2005.

[12]. H. Matsuoka, T. Komazaki, Y. Mukai, M. Shibusawa, H. Akane, A. Chaki, N. Uetake and M. Saito, “High throughput easy microinjection with a single-cell manipulation supporting robot,” Journal of Biotechnology, pp. 185.194, 2005.

[13]. M. Ammi and A. Ferreira, “Realistic visual and haptic rendering for biological-cell injection,” Proc. of the IEEE Int. Conf. on Robotics and Automation, pp.918-923, 2005.

[14]. X. D. Li, G. Zong and S. Bi, “Development of Global Vision System for Biological Automatic Micro-Manipulation System,” Proc. of the IEEE Int. Conf. on Robotics and Automation, vol.1, pp. 127-132, 2001.

[15]. R. Kumar, A. Kapoor, and R. H. Taylor, "Preliminary experiments in robot/human cooperative microinjection", IEEE/RSJ Int. Conf. on Intelligent Robots and Systems (IROS), pp. 3186 - 3191, 2003.

[16]. H. B. Huang, D. Sun, J. K. Mills, and W. J. Li, “Visual-based impedance force control of three-dimensional cell injections system,” Proc. IEEE Int. Conf. on Robotics & Automation, pp. 4196-4201, 2007.

[17]. H. Huang, D. Sun, J. K. Mills, W. J. Li, and S. H. Cheng, “Visual-based impedance control of out-of-plane cell injection systems,” *IEEE Trans.Autom. Sci. Eng.*, vol. 6, no. 3, pp. 565–571, Jul. 2009.

[18]. W. H. Wang, X.Y. Liu, D. Gelinas, B. Ciruna and Y. Sun, “A fully automated robotic system for microinjection of zebrafish embryos,” PLoS ONE, vol 2, no. 9, e862. doi:10.1371/journal.pone.0000862, 2007.

[19]. H. Huang, D. Sun, J. K. Mills, and S. H. Cheng, “Integrated vision and force control in suspended cell injection system: Towards automatic batch biomanipulation,” IEEE Int. Conf. on Robotics and Automation, Pasadena, CA, USA, pp. 3413-3419, MAY 2008.

[20]. Z. Lu, C. Y. Chen, J. Nam, R. Ge and W. Lin, "A micromanipulation system with dynamic force-feedback for automatic batch microinjection," Journal of Micromechanics and Microengineering, vol. 17, pp. 314-321, 2007.

[21]. X. J. Zhang, M. P. Scott, C. F. Quate and O. Solgaard, "Microoptical Characterization of Piezoelectric Vibratory Microinjections in Drosophila Embryos for Genome-Wide RNAi Screen," Journal of Microelectromechanical Systems, vol.15, no. 2, pp. 1-10, 2006.

[22]. T. Fujisato, S. Abe, T. Tsuji, M. Sada, F. Miyawaki and K. Ohba, " The development of an OVA holding device made of microporous glass plate for genetic engineering," Proc. of the 20th Annual Int. Conf. of the IEEE Engineering in Medicine and Biology Society, vol. 20, pp. 2981-2982, 1998.

[23]. Wei Zhao, Guanghua Zong, Shusheng Bi, "Micromanipulator Visual Servo Control," ROBOT, Vol.23, No.2, March 2001.

[24]. P. V. C. Hough, "Machine analysis of bubble chamber pictures," in Proc. Int. Conf. High Energy Accelerators Instrum., 1959, pp. 554–556.

[25]. W. T. Qu, "Chord midpoint Hough transform based ellipse detection method," Journal of Zhejiang University (Engineering Science), Vol. 39, No. 8, 2005.

[26]. Y. Zhang and K. K. Tan, "Text extraction from images captured via mobile and digital devices," in Proc. 5th Int. Conf. Ind. Autom., Montreal, QC, Canada, Jun. 11–13, 2007. TITS-07-P03.

[27]. M. A. Greminger, and B. J. Nelson, "Vision-based force measurement," IEEE Trans. on Pattern Analysis and Machine Intelligence, vol. 26, no. 3, pp. 290-298, 2004.

[28]. Y. H. Anis, J. K. Mills and W. L. Cleghorn, "Visual measurement of MEMS microassembly forces using template matching," Proc. IEEE Int. Conf. on Robotics & Automation, pp. 275.280, 2006.

[29]. Y. T. Shen, N. Xi, U. C. Wejinya, W.J. Li, and J. Z. Xiao, “Infinite dimension system approach for hybrid force/position control in micromanipulation,” Proc. IEEE Int. Conf. on Robotics & Automation, pp. 2912-2917, 2004.

[30]. B. Nelson, Y. Zhou, B. Vikramaditya, “Sensor-based micro-assembly of hybrid MEMS devices,” IEEE Control Systems Magazine, vol. 18, pp. 35.45, 1998.

[31]. Y. Zhou, B. J. Nelson, B. Vikramaditya, “Integrating optical force sensing with visual servoing for microassembly,” Journal of Intelligent and Robotic Systems, Vol. 28, No. 3, pp. 259-276, 2000.

[32]. Yu Xie, Dong Sun, Senior Member, IEEE, Chong Liu, Shuk H. Cheng, and Yun H. Liu, “A Force Control Based Cell injection Approach in a Bio-Robotics System,” 2009 IEEE International Conference on Robotics and Automation Kobe International Conference Center Kobe, Japan, May 12-17, 2009.

[33]. A. Pillarisetti, M. Pekarev, A. D. Brooks, and J. P. Desai, “Evaluating the effect of force feedback in cell injection,” IEEE Trans. on Automation Science and Engineering, vol. 4, pp.322-331, 2007.

[34]. D. H. Kim, S. Yun and B. Kim, “Mechanical force sensor response of single living cells using a microrobotic system,” Proc. of the IEEE Int. Conf. on Robotics and Automation, pp. 5013-5018, 2004.

[35]. Y. T. Shen, U. C. Wejinya, N. Xi, and C. A. Pomeroy, “Force Measurement and Mechanical Characterization of Living Drosophila Embryos for Human Medical Study,” Journal of Engineering in Medicine, vol. 220, November 2006.

[36]. K. W. C. Lai, C. C. H. Kwong and W. J. Li, “KL probes for robotic-based cellular nano surgery,” Proc. of the IEEE Conf. on Nanotechnology, pp. 152-155, 2003.

[37]. Y. Sun, K. T. Wan, K. P. Roberts, J. C. Bischof and B. J. Nelson, “Mechanical property characterization of mouse zona pellucida,” IEEE/ASME Trans. on Nanobioscience, vol. 2, pp. 279-286, 2003.

[38]. X. J. Zhang, S. Zappe, R. W. Bernstein, C. C. Chen, O. Sahin, M. Fish, M. P. Scott and O. Solgaard, "Micromachined silicon force sensor based on diffractive optical encoders for characterization of microinjection," Sensors and Actuators: A Physical, vol. 114/2-3, pp. 197-203, 2004.

[39]. F. Arai, T. Sugiyama, T. Fukuda, H. Iwata and K. Itoigawa, "Micro Tri-axial Force Sensor for 3D Bio-manipulation," Proc. IEEE Int. Conf. on Robotics and Automation, pp. 2744-2749, 1999.

[40]. Huang H, J. K. Mills, C. Lu, Sun D, "A universal pizeo-driven ultrasonic cell microinjection system," Biomed Microdevices 13:743–752, 15 May 2011.

[41]. Y. Tan, D. Sun, W., and S. H. Cheng, "Mechanical modeling of biological cells in microinjection," IEEE Trans. on Nanobioscience, vol. 7, no. 4, pp. 257-266, 2008.

[42]. C. Lu and J. K. Mills, "Three Cell Separation Design for Realizing Automatic Cell Injection," Proc. IEEE Int. Conf. on Complex Medical Engineering, pp. 599-603, May 22-25, 2011.

[43]. L. Mattos, E. Grant, R. Thresher and K. Kluckman, "New developments towards automated blastocyst microinjections," Proceedings of IEEE International Conference on Robotics and Automation, pp. 1924-1929, 2007.

[44]. J. Brufau, M. Puig-Vidal, J. Lopez-Sanchez, J. Samitier, W. Driesen, J.-M. Breguet, N. Snis, U. Simu, S. Johansson, J. Gao, T. Velten, J. Seyfried, R. Estana and H. Woern, "MICRON: small autonomous robot for cell manipulation applications," Proceedings of the IEEE International Conference on Robotics and Automation, pp. 844-849, 2005.

[45]. Huang H. B., Sun D., Mills J. K. and Li W. J., A visual impedance force control of a robotic cell injection system. Proceedings of IEEE International Conference on Robotics and Biomimetics, pp. 233-238, 2006.

[46]. Reichle C, Muller T, Schnelle T, Fuhr G. "Electro-rotation in octopole micro cages," J. Phys. D Appl. Phys. 32:2128 – 35, 1999.

[47]. H. Kobayashi, I. Ishimaru, R. Hyodo, T. Yasokawa, K. Ishizaki, S. Kuriyama, T. Masaki, S. Nakai, K. Takegawa, and N. Tanaka, “A precise method for rotating single cells,” Appl. Phys. Lett. 88(13), 131103, 2006.

Appendices

Schematic of Cell-Transfer-Cover

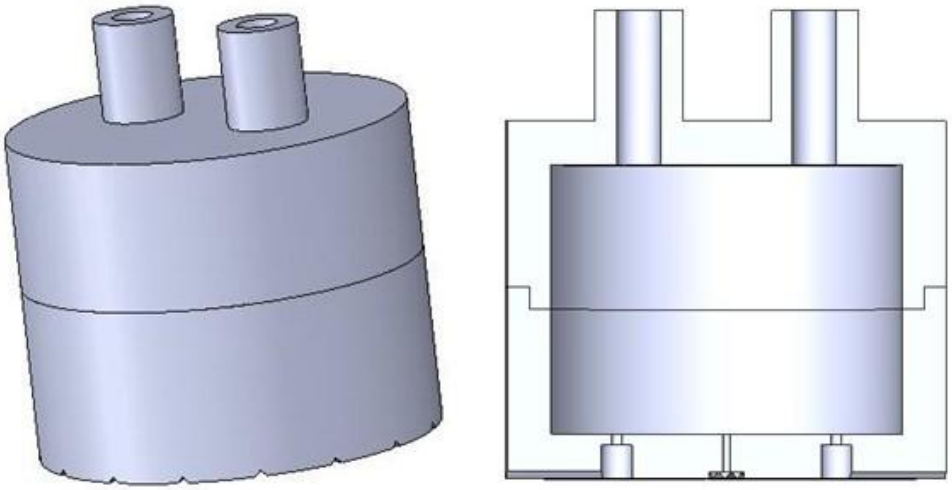

Schematic of Cell-Holder

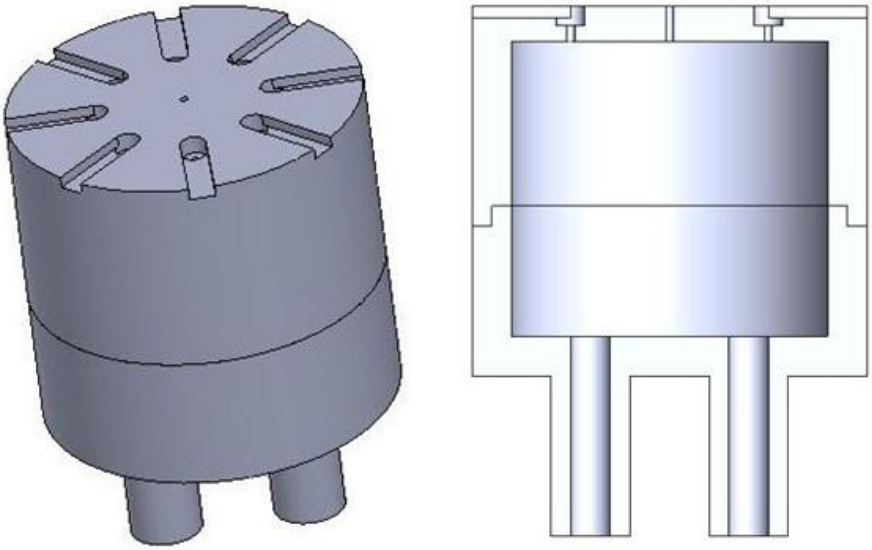

Schematic of the Combination of Cell-Transfer-Cover and Cell-Holder